Rail Safety Systems B.V.
(rail) track safety barrier

Kaldenkerkerweg 28C, 5913AE Venlo, Netherlands
www.rss-rail.com

RSS Patented Magnetic Safety Barrier for physical protection for work in and on railways. Dismountable and adjustable type for tracks.

User Manual

A. Purpose of the system

Under local and European regulations it is in most cases legally required when working on and at the track to protect people with a physical barrier to prevent operatives coming too close to any track with trains operating on them. The RSS patented system is intended to realise effective protection for work on the track.

This product is not suitable for use on third rail electrified track!

NB:
When fitted in axle counter areas it is required that, the head of the magnet is placed at least 100 mm minimum distance either side of any trackside signaling equipment (e.g. magnets are no closer than 100mm from any axle counter head). This requirement is to avoid any potential magnetic interference, and/or actually touching/attaching to any specialized equipment accidentally and causing damage during the installation or removal of the magnet.

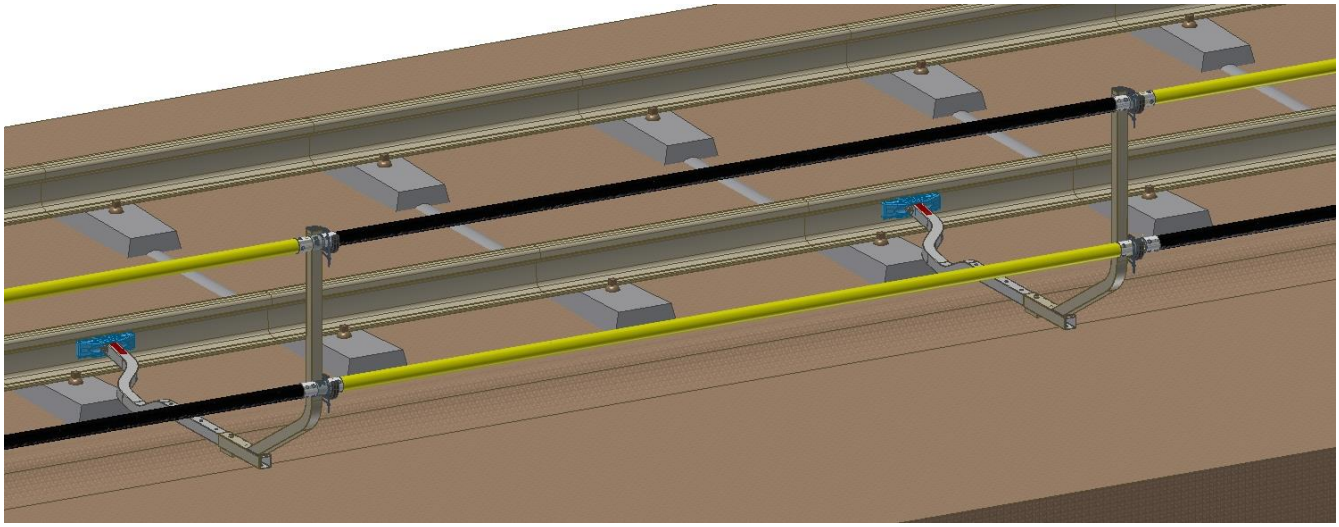

The RSS system has to be used with a maximum spacing of 3 metres between stanchions. The distance to the rail is adjustable from 1.95 to 2.55 metres measured from the centre of the track.
(UK: The distance from the edge of the rail to the barrier is adjustable from 1.233 to 1.833 metres).

The system is suitable for rails of all types 85-95 lb, UIC 54(113A) and UIC 60(CEN 60 113A) Flat Bottomed and Bullhead Rail.

The following certification standards have been applied:

- RLN00077-V004 industry directive on physical screening, separation and marking (07-2010)
- EN 13374 temporary edge protection systems.

B. Components of the RSS system

<table>
<tr>
<td> 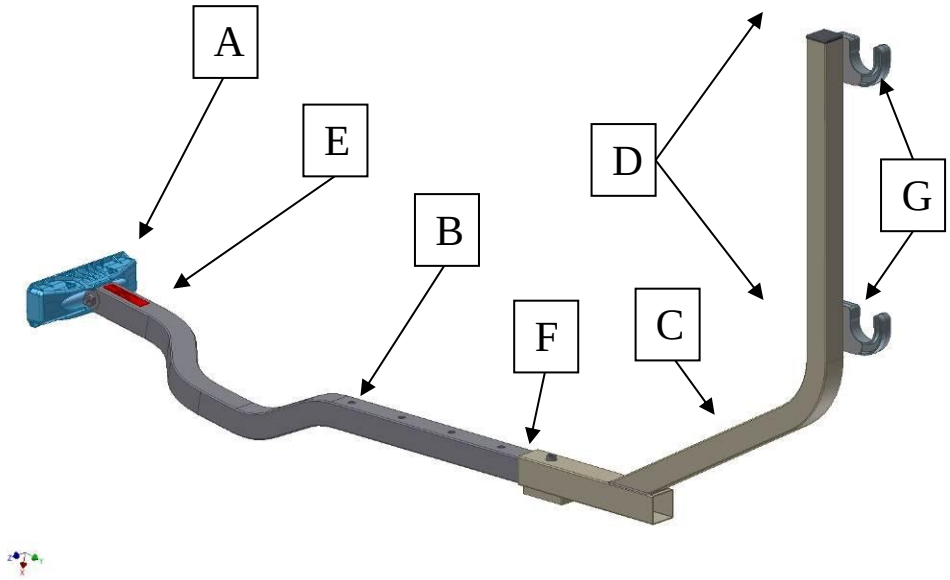
</td>
<td>1) STANCHION COMPLETE (RSS 500)
(Total Weight 8 Kgs)

A – Magnet housing with magnet

B – Fixed stanchion
C – Adjustable stanchion
D – Clamping blocks
E – Type plate
F – Adjusting bolt
G - Tie-wraps</td>
</tr>
<tr>
<td> </td>
<td>2) TUBES
(Total Weight of 3 m tube 4 kgs)

Tubes of diameter 48,5 mm, fitted with bayonet coupling. Tube length 3 metres.</td>
</tr>
</table>

C. Applications of the system.

The stanchion is adjustable between the hazard area zone A and zone B. This is shown in the diagram below. The distance from the centre of the track to the guardrail/barrier is adjustable between 1.95 metres and 2.55 metres in steps of 0.1 metre.

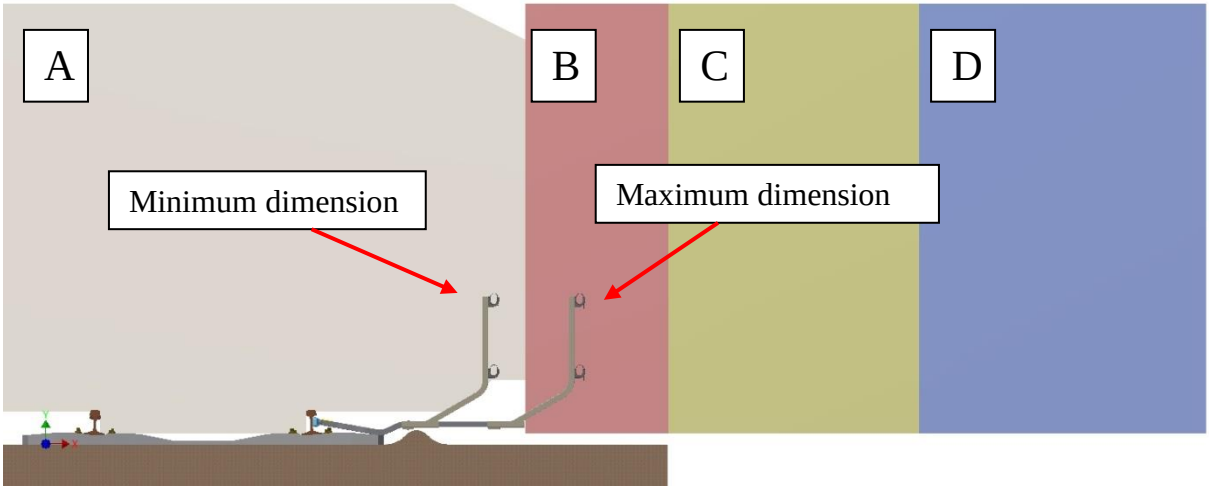

Furthermore, all safety precautions and all Network Rail rules and standards applicable to safety on the track must be observed.
If necessary, safety personnel also need to be present.
The maximum permissible working temperatures of the system are -20˚ and +60˚ Celsius.

D. Periodic maintenance and checking of the system

<u>Maintenance and checks / inspection:</u>

1. Checked once a year by your supplier, or a competent person.
2. Given that all components have been engineered and produced to be durable - stanchions and adjustable stanchions hot- dip galvanized, tubes in aluminium, plastic parts in UV-resistant materials - maintenance on the system is minimal.
3. If the system is to be used for long periods exceeding 1 week, we recommend that a visual check be carried out on the system at least once a week.

Periodic check:
Every time the system is built up again, the components need to be checked for any defects such as dents and/or damage to the stanchions or tubes.
Check if all the components are complete, see section B.
The magnet must be free of coarse soiling and steel parts. If found, they can be wiped off the magnet with a cloth – using a gloved hand – do not use exposed fingers as metal debris may be sharp.
Also check that the magnet is moving freely in its plastic housing and that the plastic housing moves freely at the hinged joint to the stanchion. In the event of damage or cracks in the plastic, do NOT use and replace it immediately.
On the type plate (E in the above drawing) is the name of the manufacturer and the type of stanchion.
Embossed about 50 mm under the clamping block on the stanchion is the unique serial number with fabrication year.

E. Building and dismantling the system

NB: This system is NOT designed to be used in situations where a 'third rail' is present.

When building, dismantling or moving the system, ensure appropriate personal protection equipment is used and all safety rules and procedures are followed.

Before building

1. Set all the adjustable stanchions to the required distance defined by the COSS for the appropriate line speed of trains. The distance is adjustable between 1.95 and 2.55 metres in steps of 0.1 metres.
2. Check that all components of the RSS system to be used are free of damage or any defects.
3. Check beforehand that the rails are not fitted with noise-dampening rubber in the web of the rail.

   If noise-dampening rubber is present in the web of the rail, this magnetic barrier guardrail system cannot be used
4. Check that the sleepers on which the stanchions are supported are free of obstacles or debris on the top surface. It is not essential to use a sleeper for support; the barrier can rest on the ballast.
5. In case the system is used between two tracks. Check the centre to centre distance between two tracks; if the centre to centre distance is smaller than 4 metres also check the position of the stanchions and tube position to both tracks.

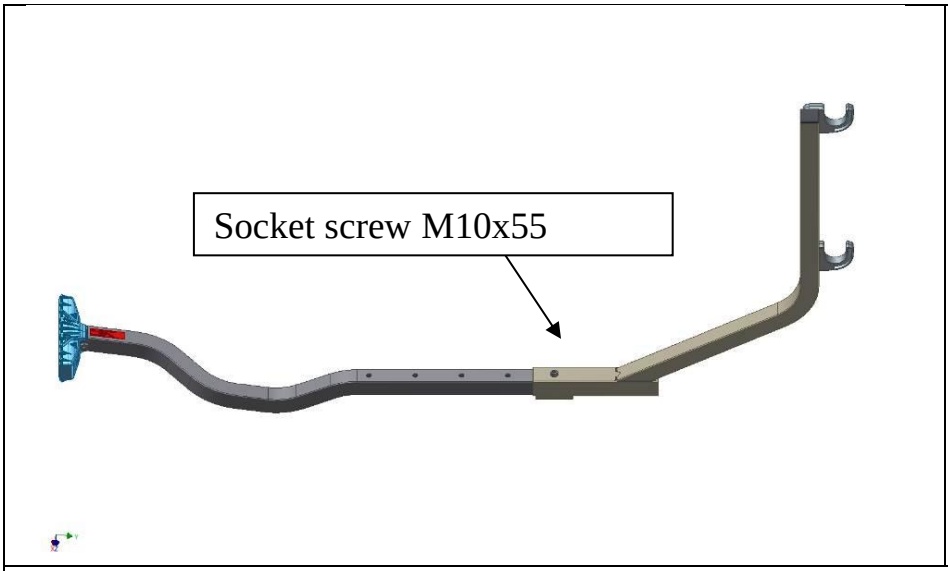

Adjusting stanchions

Using the socket screw, set the stanchion to the agreed length.
From the centre of the track, the distances are:
1st hole 1.95 metres
2nd hole 2.05 metres
3rd hole 2.15 metres
4th hole 2.25 metres
5th hole 2.35 metres
6th hole 2.45 metres
7th hole 2.55 metres

UK dimensions

	mm from web of rail	feet & inches from web of rail	
Hole 1	1312	4′ 3 5/8"	For speeds 100 mph or less
Hole 2	1412	4′ 7 7/8"	
Hole 3	1512	4′ 11 1/2"	
Hole 4	1612	5′ 3 3/8"	
Hole 5	1712	5′ 7 3/8"	
Hole 6	1812	5′ 11 3/8"	
Hole 7	1912	6′ 3 1/4"	For speeds in excess of 100 mph

Note:
Setting the distance of the stanchion at distances other than 2.25 metres is permitted only in agreement with the COSS.

Building

Place 1st stanchion with magnetic head into the web of the rail as close to the sleeper as possible, so that the stanchion can be supported on the sleeper after lowering the stanchion into position. It is not essential to use a sleeper for support; the barrier can rest on the ballast. However, using the sleepers as a support ensures that the handrails are level after construction, and is more aesthetically or visually pleasing. Then place a 2nd stanchion not further than 3 meters of the 1st stanchion and place 2 handrail tubes in the clamping blocks. It is suggested that when building a length of barrier, that the transport frames containing the stanchions and handrails, are placed somewhere near the middle of the length to be protected. You can then build in both directions and save time and effort in walking the components to the track

NB:
When fitted in axle counter areas it is required that, the head of the magnet is placed at least 100 mm minimum distance either side of any trackside signaling equipment (e.g. magnets are no closer than 100mm from any axle counter head). This requirement is to avoid any potential magnetic interference, and/or actually touching/attaching to any specialized equipment accidentally and causing damage during the installation or removal of the magnet.

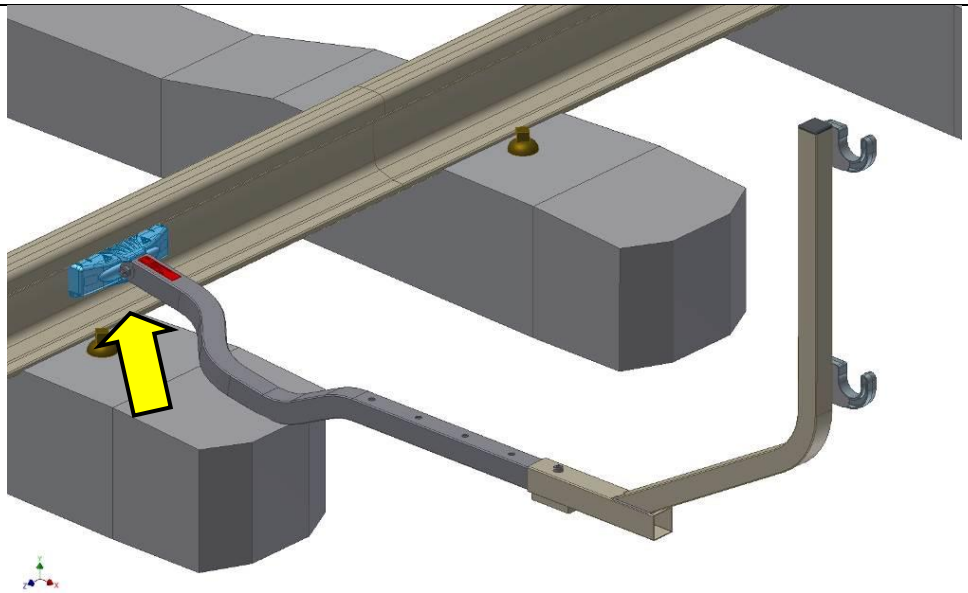	**Building 1st stanchion** 1. Place the stanchion in the web of the rail and make sure it is supported by the sleeper. Ensure that the tube of the stanchion is in a vertical position. **Remove coarse soiling between the magnet and the rail. The stanchion must be freely supported on the sleeper.**
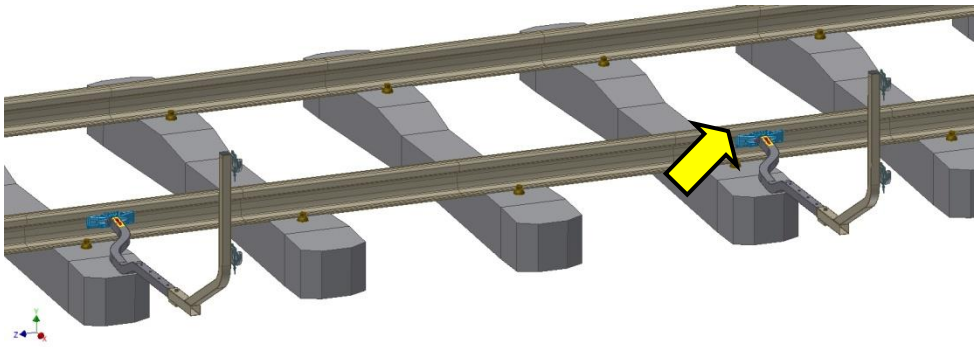	**Building 2nd stanchion.** 2. Place the 2nd stanchion at a distance of approximately 3 metres from the 1st stanchion, but not more than 3 metres

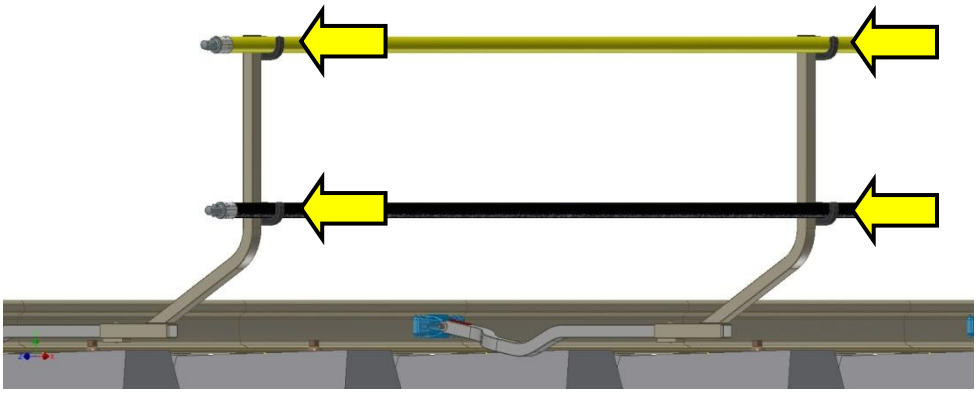	**Placing tubes.** 3. Place the tubes and clamp them into the clamping blocks.
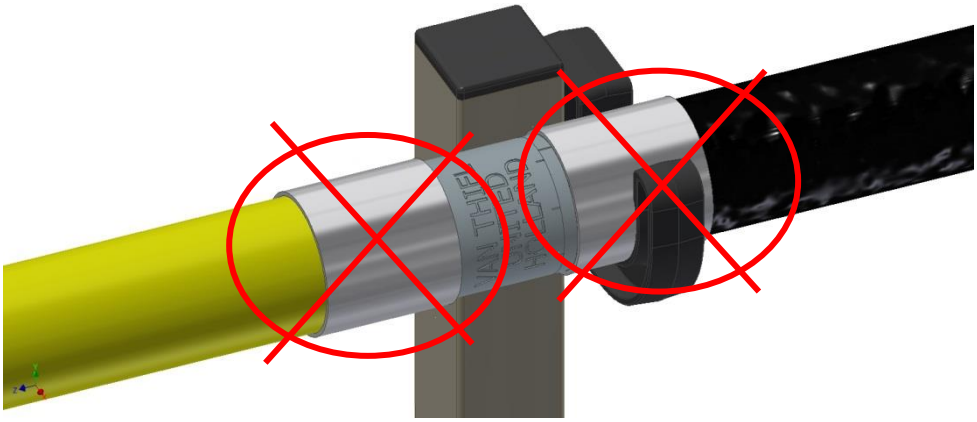	4. Placing the steel rings (including the indentations on the tubes) in the clamping block is not permitted
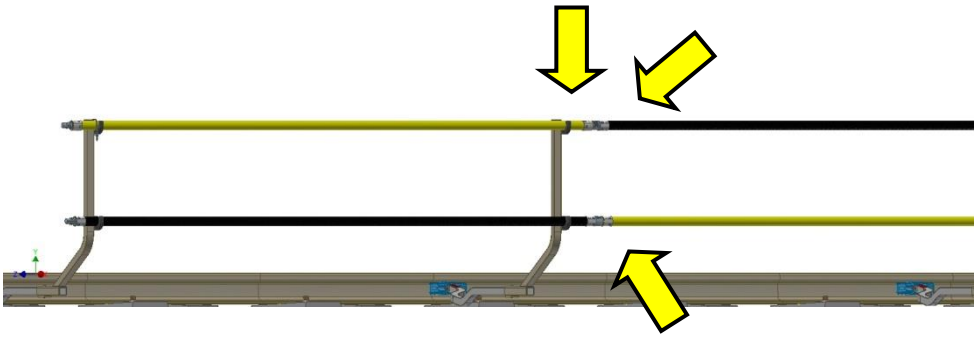	**Extending system** 5. Place the next stanchion within 3 metres, connect the tubes to one another using the bayonet and clamp the tube into the clamping blocks. 6. Repeat steps 2, 3 and 5 to lengthen the system.
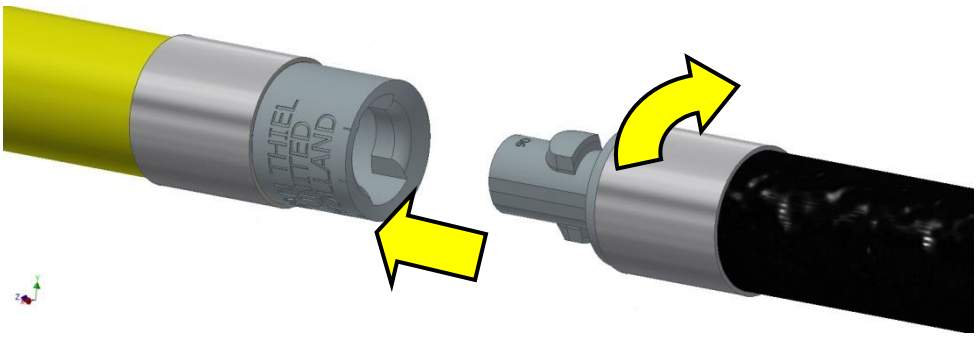	**Mounting tubes:** After pressing in, turn a quarter rotation clockwise. **Dismantling tubes:** First turn a quarter rotation anticlockwise and then pull out.

   UK 	**Colour possibilities Europe** Yellow – Black Red – White **For the UK:** Blue

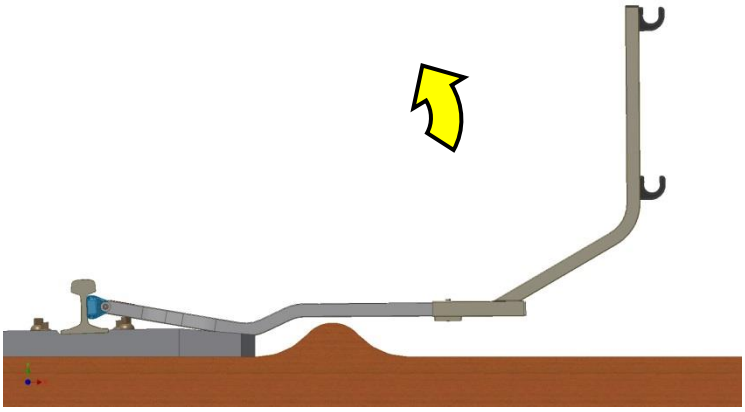

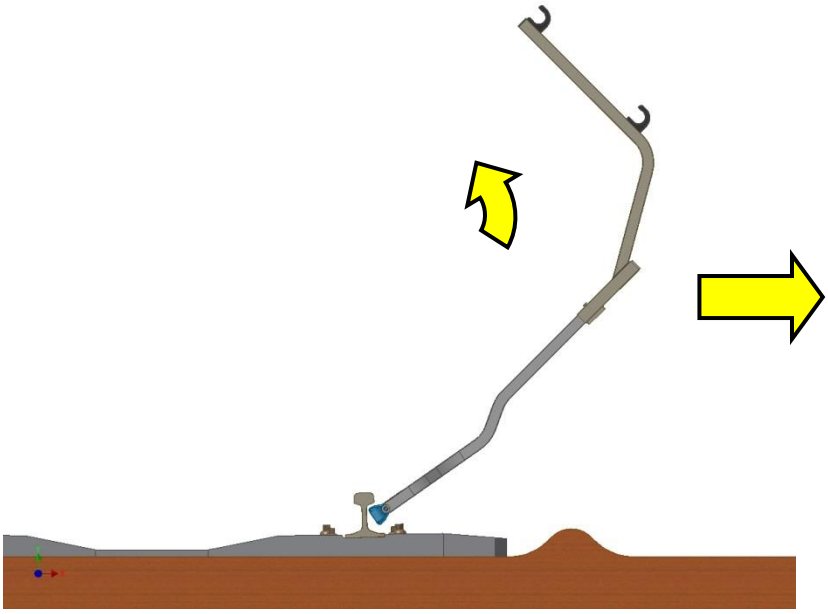

Dismantling system

7. Dismantling takes place in the reverse order. Remove tie-wraps, then lift and turn the tubes to remove them from the clamping blocks.

8. To dismantle the stanchion, lift it vertically towards the rail, until the magnet releases from the rail and then pull it away.

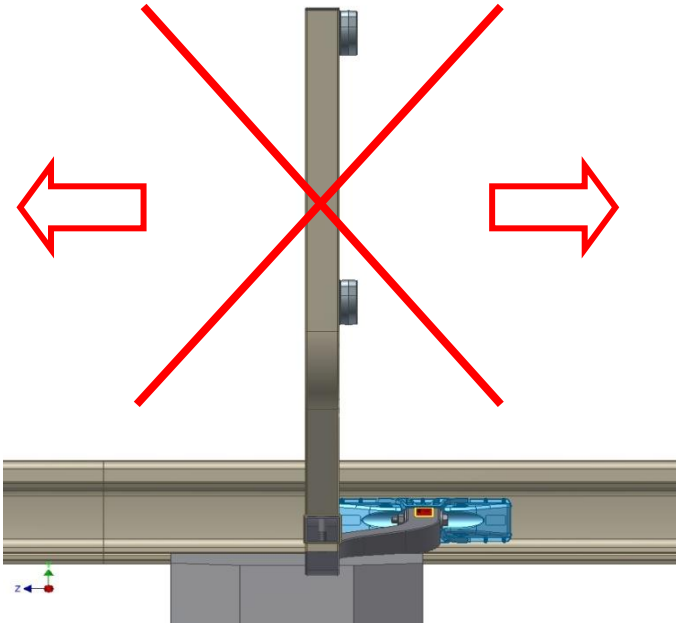	9. **Prohibited!** Trying to pull the stanchion away from the rail sideways is not possible or recommended. This will only result in you damaging the equipment.

Storing in transport containers:
After dismantling the stanchions from the track, they must be placed in the transport containers. Place the socket screw between the fixed and adjustable stanchions in the fifth hole (distance 2.35 metres from centre of track) for optimum storage in the transport container.
(Frame weight 160 kg, frame weight including stanchions 410 kg)

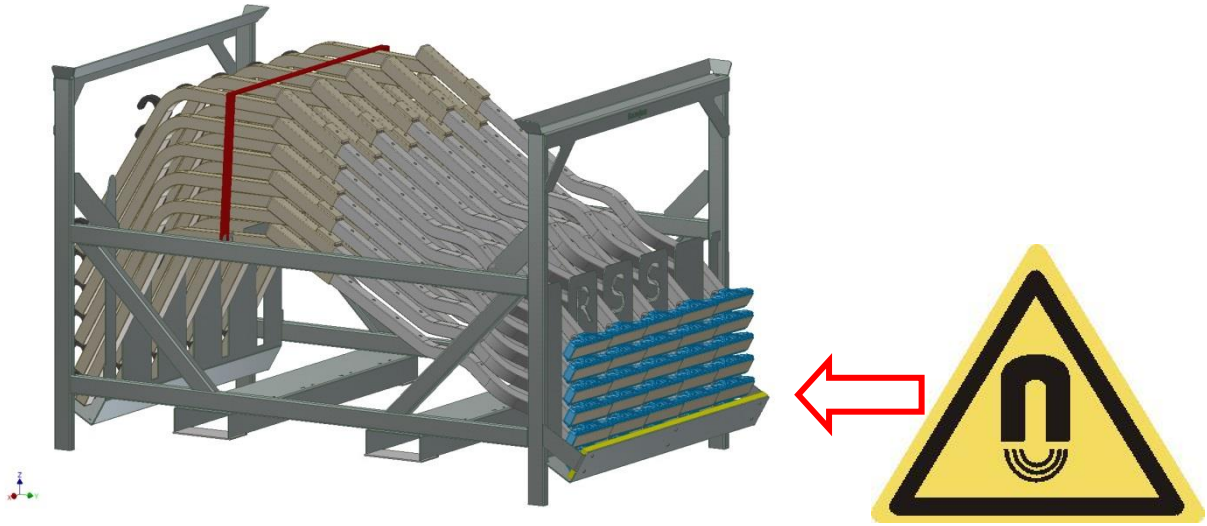

The tubes should also be placed on the transport frames.
(Frame weight including 50 tubes 200kgs)

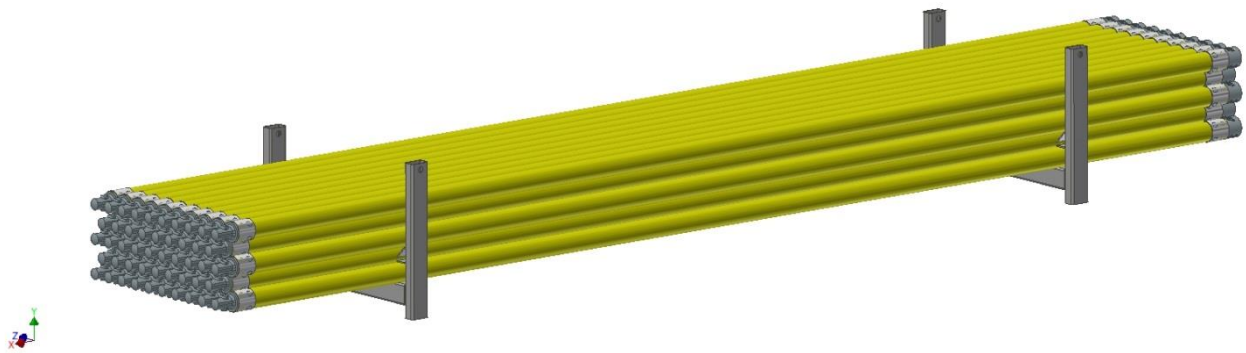

Copyright
All rights reserved. No part of this document may be duplicated, stored in an automated database or published in any form or in any manner, be it electronic, mechanical by photocopies, or recording in any other manner, without the prior written permission of RSS. RSS reserves the right to change the specifications and the content of these instructions without prior notice. RSS shall not be liable for any damage (to include consequential losses) ensuing from the use of these instructions or products described in them, including but not limited to typesetting errors or other errors in this publication.
This product is intended for use in a professional working environment.

Disclaimer
Printing errors reserved

Appendix 1
Stanchion Stickers

1:
Generic warning sticker:

2:
Product information sticker:

Appendix 2

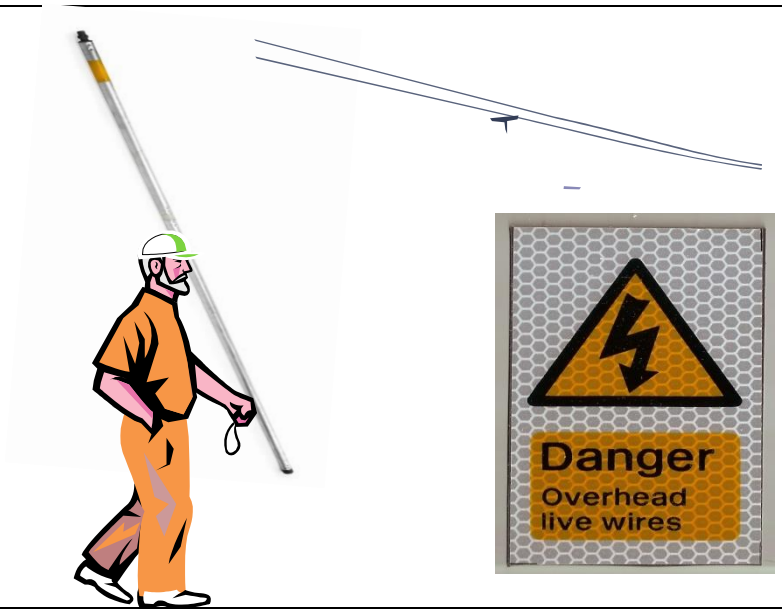	10. **Prohibited.** Do NOT carry the handrail in a vertical position when operating in situations where there is an Overhead Line with 25kva as you are likely to come within the recommended 3m contact zone.

Appendix 3

Technical drawing S207 for EU stanchion

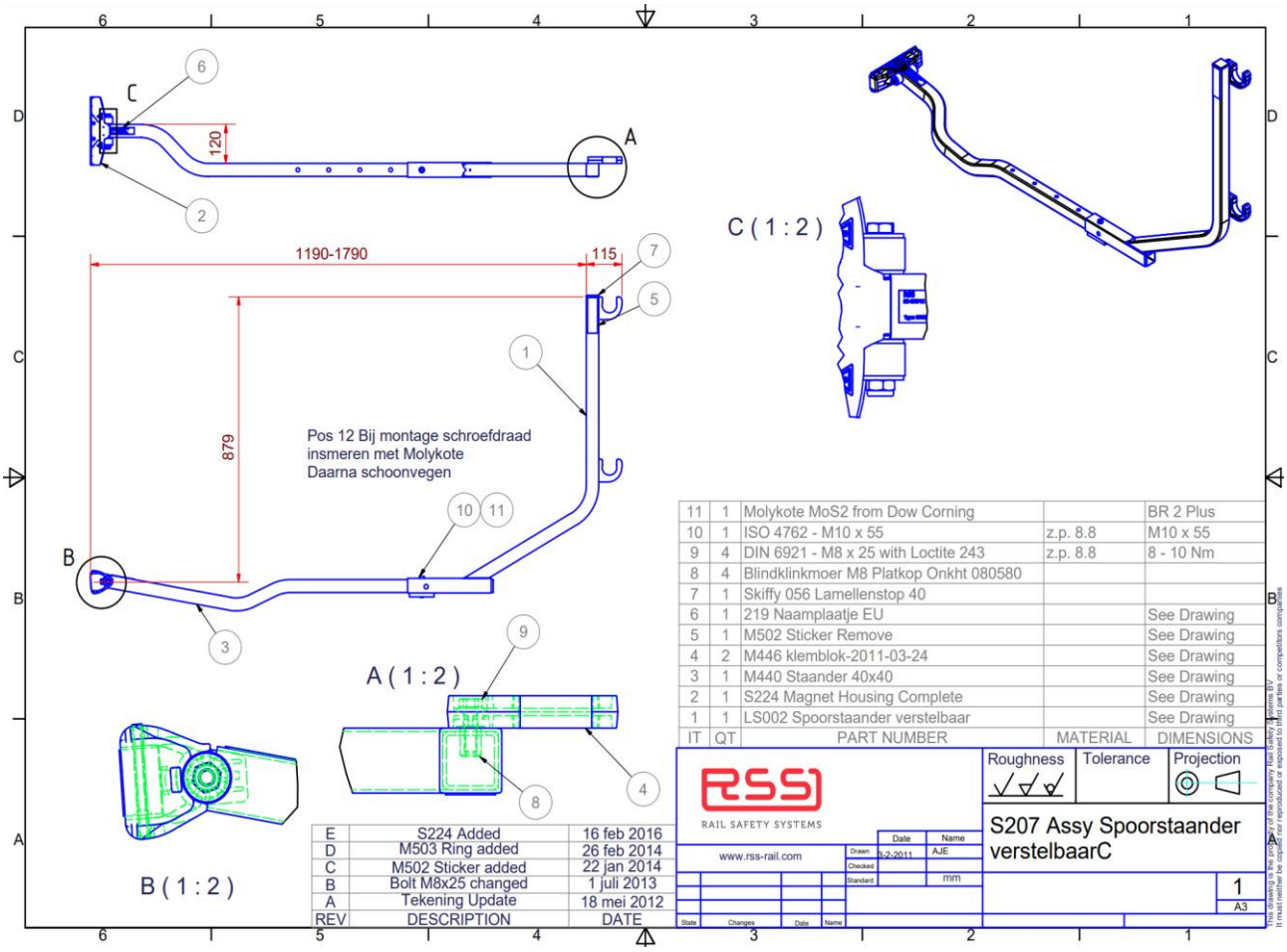

IT	QT	PART NUMBER	MATERIAL	DIMENSIONS
11	1	Molykote MoS2 from Dow Corning		BR 2 Plus
10	1	ISO 4762 - M10 x 55	z.p. 8.8	M10 x 55
9	4	DIN 6921 - M8 x 25 with Loctite 243	z.p. 8.8	8 - 10 Nm
8	4	Blindklinkmoer M8 Platkop Onkht 080580		
7	1	Skiffy 056 Lamellenstop 40		
6	1	219 Naamplaatje EU		See Drawing
5	1	M502 Sticker Remove		See Drawing
4	2	M446 klemblok-2011-03-24		See Drawing
3	1	M440 Staander 40x40		See Drawing
2	1	S224 Magnet Housing Complete		See Drawing
1	1	LS002 Spoorstaander verstelbaar		See Drawing

REV	DESCRIPTION	DATE
E	S224 Added	16 feb 2016
D	M503 Ring added	26 feb 2014
C	M502 Sticker added	22 jan 2014
B	Bolt M8x25 changed	1 juli 2013
A	Tekening Update	18 mei 2012